Cabling guide for X-series installations

NComputing X-series products deliver exceptional multimedia performance to multiple users sharing a single computer. This is enabled by the direct connection between the X-series plug-in card and the access device. While the connections use standard Category 5e and Category 6 STP cables, the signals going across the cable are not Ethernet. Instead, the video and peripheral signals are sent directly using all four twisted pairs of the cable. Therefore it is important to always use correctly specified, quality cables with the X-series. This cabling guide will help you select the right cable type and length for your installation.

Cable Type

The table below lists the two cable types that are supported by the X-series.

Cable Type	Distance Supported
Category 5e UTP (unshielded twisted pair)	up to 5 meters (16.4 feet)
Category 6 STP (shielded twisted pair)	up to 10 meters (32.8 feet)

Shielded Category 6 cable is required above 5 meters to ensure video signal quality over the longer distance. Cables should be terminated to RJ-45 connectors according to the standard method (wires match on both ends of the cables as shown below). This is the most common configuration available when purchasing standard patch cables. So called “cross-over” cables (used to directly connect two Ethernet devices without a switch) CANNOT be used.

NComputing offers a certified 5 meter Category 5e UTP cable, which is the longest Category 5e cable supported by the X-series. Other Category 5e cable length options and Category 6 STP cables are readily available from a variety of suppliers.

You have two options for terminating your cable:

1) Purchase patch cables of a specific length that have been terminated by your cable vendor

2) Purchase a large roll of cable (often sold in 50 ft or 100 ft rolls) and then terminate the ends yourself to create any custom length

If you choose to use the second option, make sure you have the appropriate termination tools and carefully follow the instructions provided with the tools to ensure proper termination. Pre-made cables are convenient, but can result in excess cable if you cannot find the exact length you need. Making your own cable can give you a custom fit and may save on material costs, but will require significantly more installation time. Most customers find that using pre-made cables is the best and easiest approach.

When sizing your cables, provide some extra length to make it easy to route cable (i.e. for pre-made cables, choose the next biggest standard size from what you have measured). However, avoid providing too much cable leaving excess to be rolled or bundled. The following section provides some basic cable sizing guidelines for typical X-series configurations.

Example Configurations

NComputing X-series systems can be configured in a wide variety of ways depending on the specific needs of your application. The following examples can be used to help identify the approximate cable lengths for your installation. The examples assume a center-to-center spacing of 36 inches (~0.9 meters) between users (for side-by-side configurations) and a table height of 30 inches (~0.76 meters). All of the examples below are configured for lengths under 16.4 feet (5 m) – which allow the use of Category 5e cable. Other configurations may require longer cables which would require using Category 6 STP cable. Classrooms, office cubicles, internet cafés and other environments have unique needs and furniture can also vary in size. Please use the following guidelines just as a starting point for your planning. It is important to carefully measure your specific environment to ensure the right cable length. Again, if using off-the-shelf cables, always choose the next largest available size.

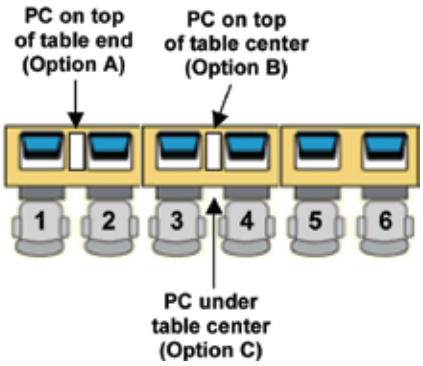

X550 Straight Line Configuration – 1 Kit

Category 5e Cable Lengths (feet)

Station	1	2	3	4	5	6
Option A	Host	3′	6′	9′	12′	15′
Option B	9′	6′	Host	3′	6′	9′
Option C	12′	9′	Host	6′	9′	12′

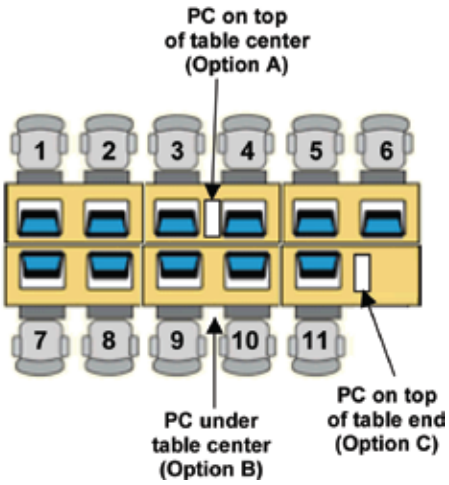

X550 Double Row Configuration – 2 Kits

Category 5e Cable Lengths (feet)

Station	1	2	3	4	5	6
Option A	9′	6′	Host	3′	6′	9′
Option B	12′	9′	Host	6′	9′	12′
Option C	15′	12′	9′	6′	3′	3′

Station	7	8	9	10	11
Option A	9′	6′	3′	3′	6′
Option B	12′	9′	6′	6′	9′
Option C	15′	12′	9′	6′	Host

1 meter = 3.28 feet

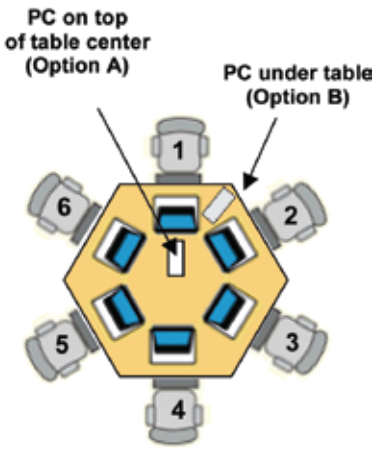

X550 Hexagon Configuration – 1 Kit

Category 5e Cable Lengths (feet)

Station	1	2	3	4	5	6
Option A	Host	3′	3′	3′	3′	3′
Option B	Host	6′	9′	9′	9′	6′

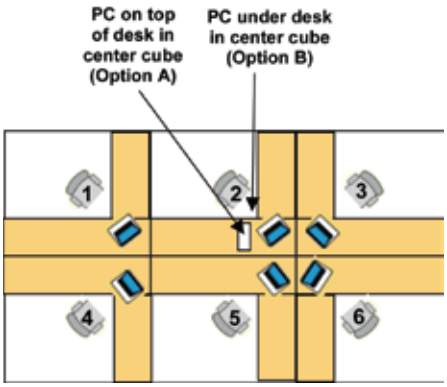

X550 6′x6′ Cubicle Configuration – 1 Kit

Category 5e Cable Lengths (feet)

Station	1	2	3	4	5	6
Option A	Host	3′	3′	3′	3′	3′
Option B	Host	6′	9′	9′	9′	6′